Enable 3D View

Enable 3D View

Enable 3D View

Enable 3D View

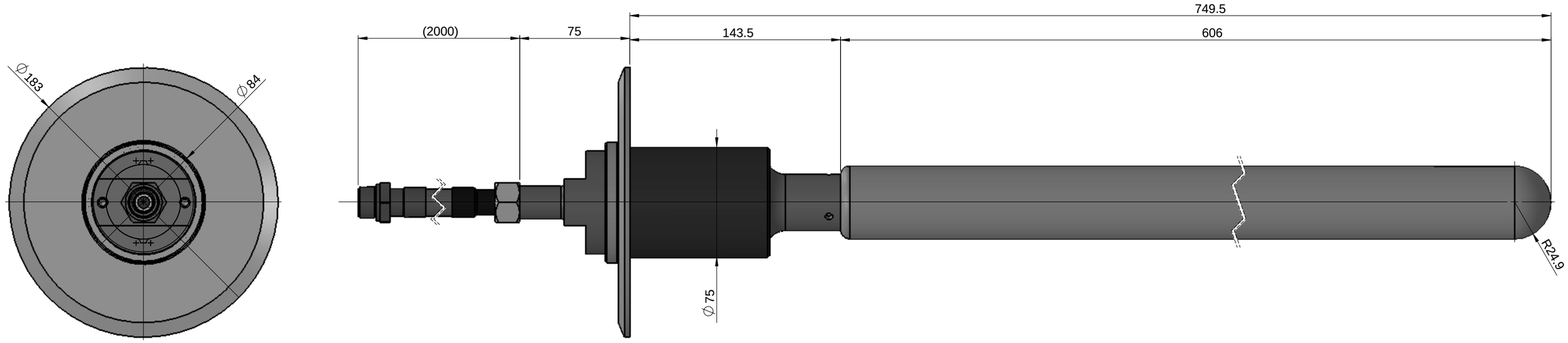

Option 1
Submersible 20 kHz Rigid Mount Short SS Housing (Flange below)

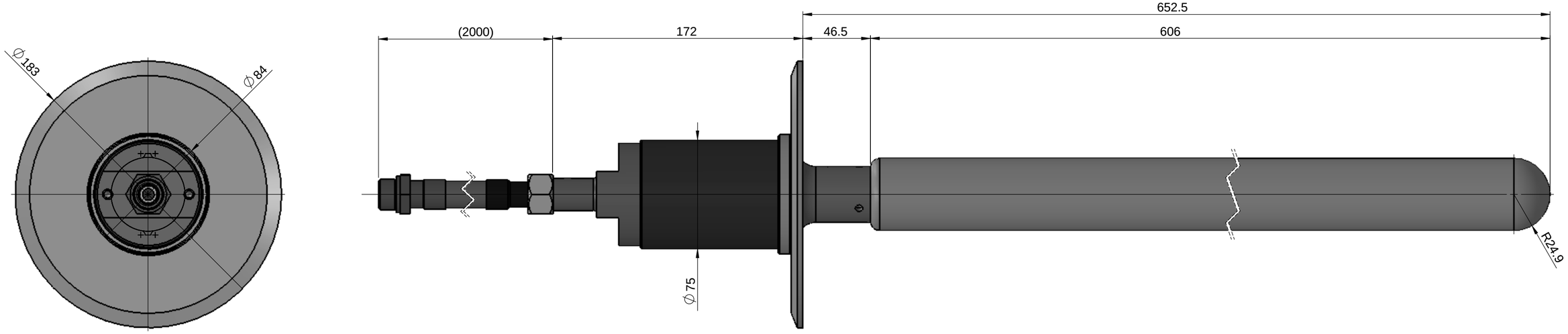

Option 2
Submersible 20 kHz Rigid Mount Short SS Housing (Flange above)

PROJECT DIRECTOR M.Prokic	DATE 20.09.2014				DEBUR AND BREAK SHARP EDGES		DO NOT SCALE DRAWING	REVISION
drew H. Puga	DATE MODIFY						MPI-ULTRASONICS MARAIS 36 2400 Le Locle Switzerland e-mail : mpi@mpi-ultrasonics.com phone +41 (0) 32 9314045	
MATERIAL:								
General tolerance SN 258440								
dimension nominale (mm)	>3 ...6	>6 ...30	>30 ...120	>120 ...400	>400 ..1000	>1000 ..2000	Submersible 20 kHz - Options	
Ecarts (mm)	_ 0.05	_ 0.1	_ 0.15	_ 0.2	_ 0.3	_ / .4	SCALE: 1:5	SHEET 1 OF 1 A2